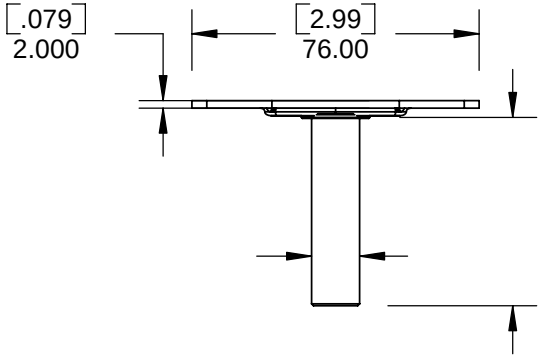

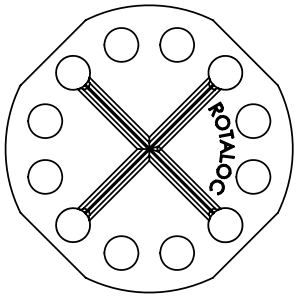

BACK VIEW

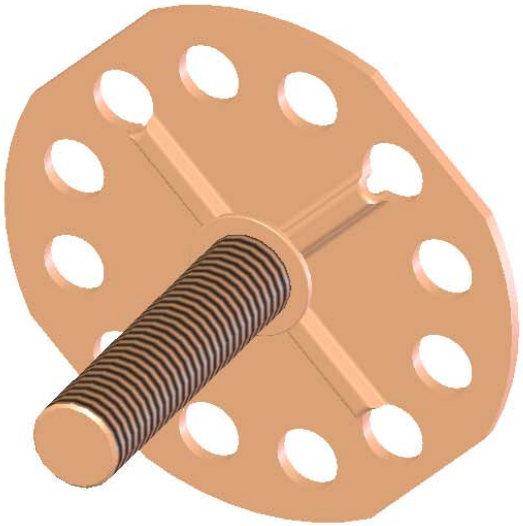

BASEPLATE SHOWN APPROX SIZE
[1:1 SCALE]

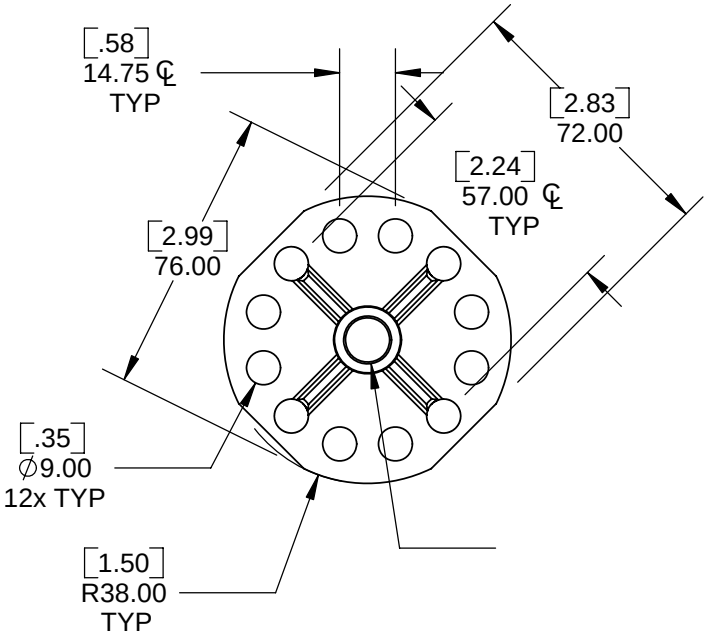

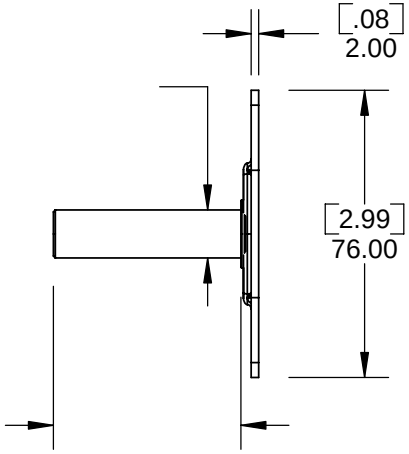

Rotaloc Int'l
Bonding Fasteners

www.rotaloc.com
info@rotaloc.com

1.888.768.2652
1.303.948.5434

THIS DOCUMENT IS PROPRIETARY AND CONFIDENTIAL

THE INFORMATION CONTAINED IN THIS DRAWING IS THE SOLE PROPERTY OF ROTALOC INT'L. ANY REPRODUCTION IN PART OR AS A WHOLE WITHOUT THE WRITTEN PERMISSION OF ROTALOC INT'L IS STRICTLY PROHIBITED.

DRAWING LAYOUT & CONTENTS COPYRIGHT© 2006 - ROTALOC INT'L

ROTALOC® IS A REGISTERED TRADEMARK OF ROTALOC INT'L, LLC

MATERIAL	
PLATING	

UNLESS OTHERWISE SPECIFIED:

DIMENSIONS ARE IN:
[INCHES]
MILLIMETERS

TOLERANCES:
ANGULAR: ± 1°
TWO PLACE DECIMAL: ± [.006"] .15
THREE PLACE DECIMAL: ± [.004"] .100

DIMENSIONS & TOLERANCES
DO NOT INCLUDE PLATINGS OR COATINGS

INTERPRET GEOMETRIC
TOLERANCING PER: ASME Y14.5

DO NOT SCALE DRAWING

	NAME	DATE
DRAWN		
CHECKED		

COMMENTS:

ROTALOC INT'L

TITLE:

SIZE	DWG. NO.	REV
A	M1-B76	

WEIGHT: SHEET 1 OF 1

5 4 3 2 1